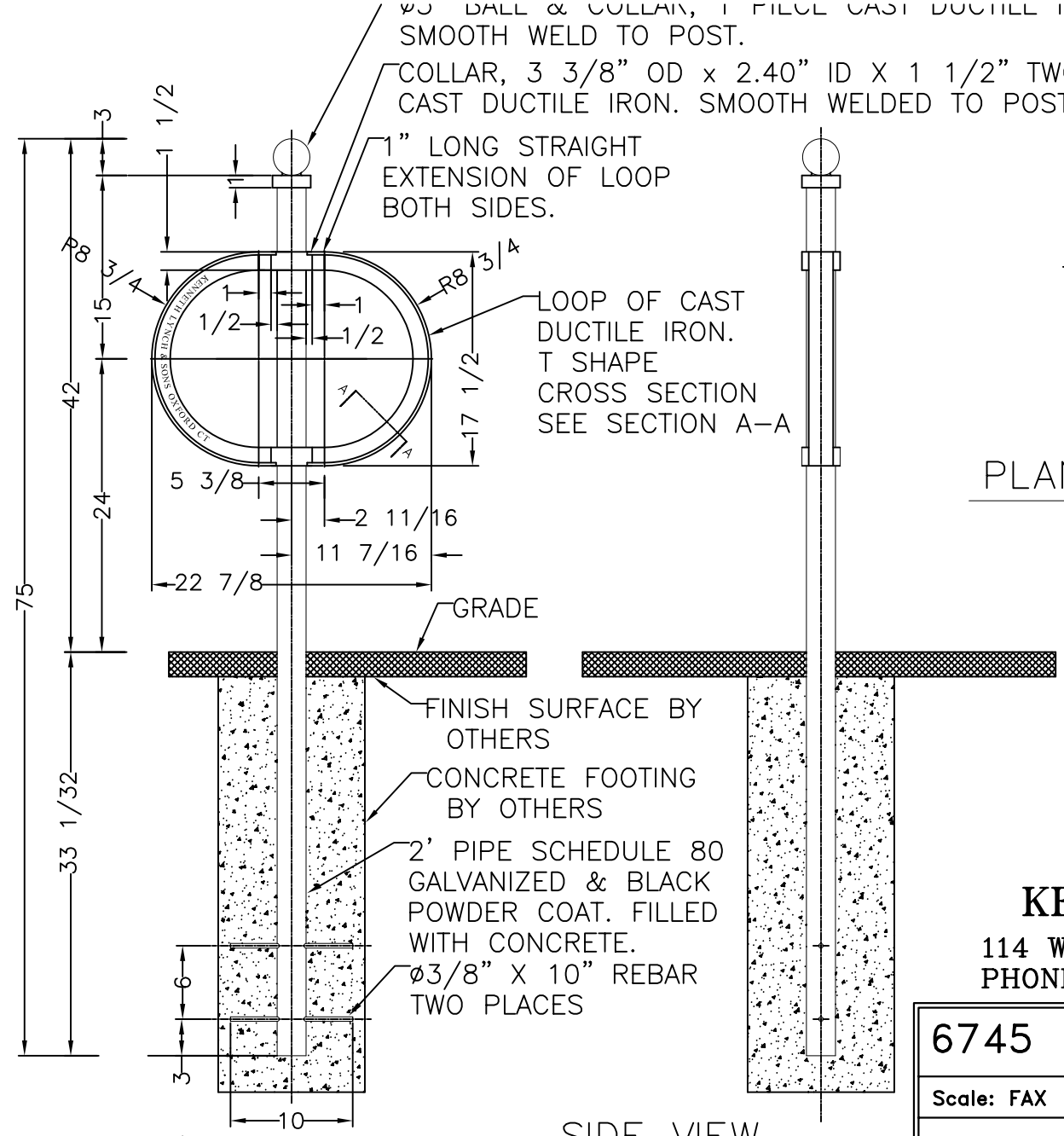

1 POST AND LOOP BICYCLE RACK

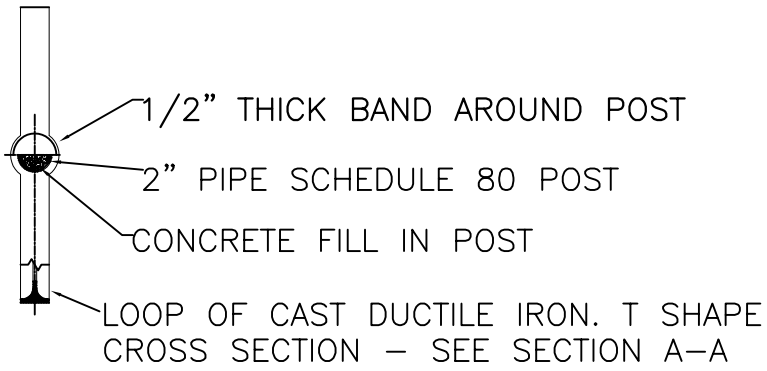

PLAN VIEW

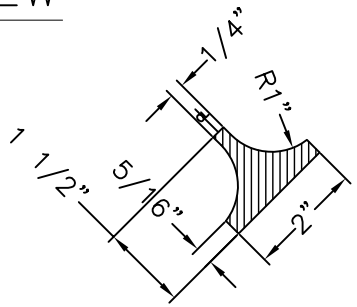

2 SECTION A–A

KENNETH LYNCH & SONS

114 WILLENBROCK ROAD, OXFORD CT 06478
PHONE 203–264–2831, FAX: 204 264–2833

6745 POST & LOOP BICYCLE RACK		
Scale: FAX	Date: 11/2/10	Drawn: S.L.A.
MAT'L: CAST DUCTILE IRON	#6745 WEB	